APPROVED: _____

DATE: _____ TITLE: _____

Rev	AWO #	Description	Date	Appr
-		RELEASED	5/20/14	
A		REVISED DIM. & SPEC.	8/18/14	AY/GH

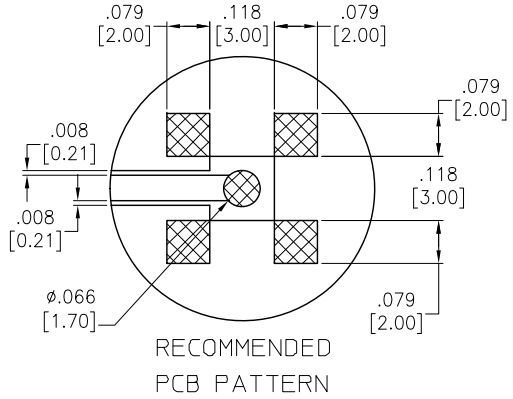

RECOMMENDED PCB PATTERN

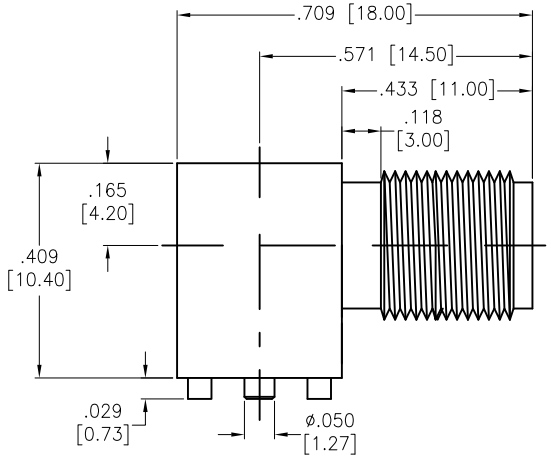

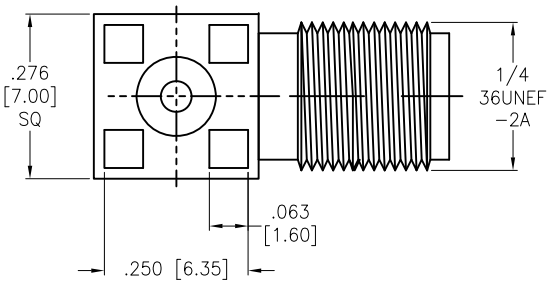

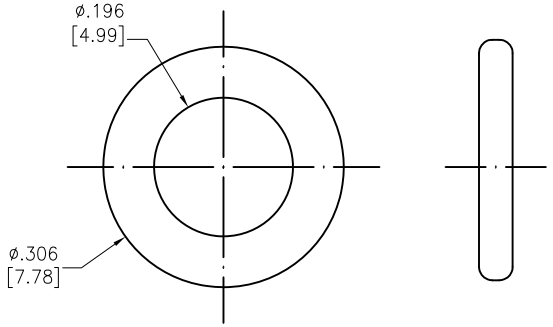

WATERPROOF RING

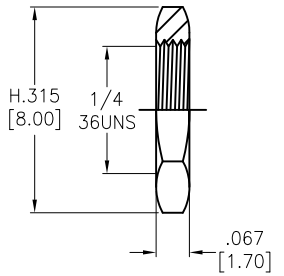

NUT

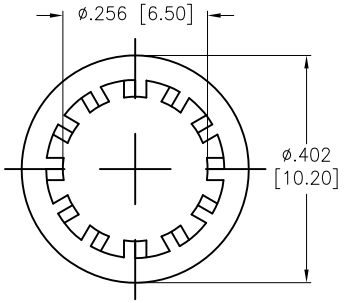

WASHER

DESCRIPTION	MATERIAL	FINISH
BODY	BRASS	GOLD
INSULATOR	TEFLON	WHITE
CENTER CONTACT	PHOSPHOR BRONZE	GOLD
WASHER	IRON	GOLD
NUT	BRASS	GOLD
WATERPROOF RING	SILICONE	BLACK

SPECIFICATIONS:

Electrical:
Nominal Impedance: 50 ohms
Frequency range: 0–6 GHz
VSWR: 1.5 max
Working voltage: 500V rms @ Sea level
Insulator Resistance: 5000 Megohms min.
Temperature Rating:
Operating temperature: –55°C to +155°C
Environmental:
Lead free, RoHS compliant.

RoHS COMPLIANT

UNLESS OTHERWISE SPECIFIED
ALL DIMENSIONS ARE INCHES [MM]
TOLERANCES: EXCEPT AS NOTED

INCHES		HOLES	
.X	± .10	Ø.X	±.10
.XX	± .020	Ø.XX	±.015
.XXX	± .015	Ø.XXX	±.010

APPROVALS		DATE
DRAWN	HR	5/20/14
CHECKED	GH	5/20/14
APPROVED		

ADAM TECH
909 Rahway Avenue, Union, NJ 07083
Phone: 908-687-5000 Fax: 908-687-5710

TITLE: SMA JACK, RIGHT ANGLE, PCB MOUINT

SIZE	PART NO.	REV.
X	RF2-119-T-00-50-G-HDW	A

REF: S00128C | SCALE: NTS | SHEET 1 OF 1