Rev	AWO #	Description	Date	Appr
-		RELEASED	11/1/18	

APPROVED: _____

DATE: _____ TITLE: _____

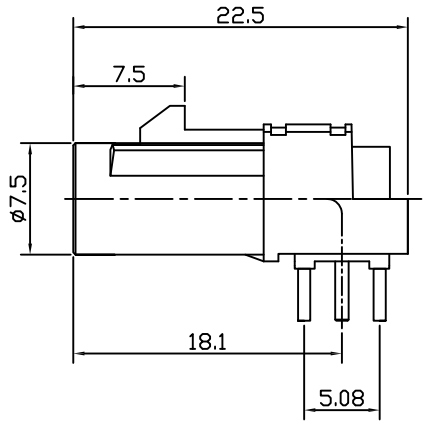

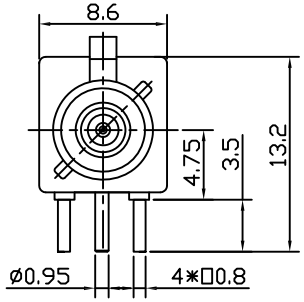

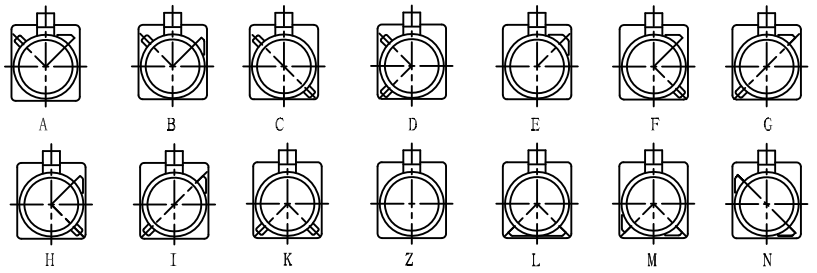

Port Type

Type	Color	Item No
A	BLACK	RF55-35A-T-00-50-SH
B	WHITE	RF55-35B-T-00-50-SH
C	BLUE	RF55-35C-T-00-50-SH
D	BORDEAUX VIOLET	RF55-35D-T-00-50-SH
E	GREEN	RF55-35E-T-00-50-SH
F	BROWN	RF55-35F-T-00-50-SH
G	GREY	RF55-35G-T-00-50-SH
H	VIOLET	RF55-35H-T-00-50-SH
I	BEIGE	RF55-35I-T-00-50-SH
K	CURRY	RF55-35K-T-00-50-SH
Z	WATER BLUE	RF55-35Z-T-00-50-SH
L	CARMINE RED	RF55-35L-T-00-50-SH
M	PASTEL ORANGE	RF55-35M-T-00-50-SH
N	PASTEL GREEN	RF55-35N-T-00-50-SH

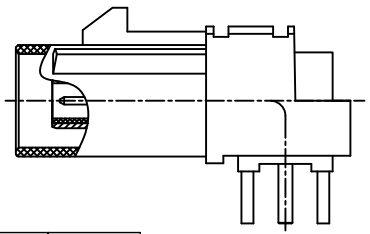

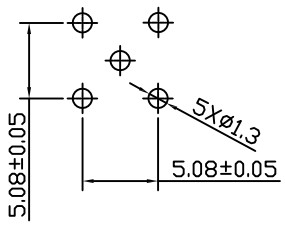

RECOMMENDED P.C.B LAYOUT

PLASTIC SHELL	PA66+30%GF	
INSULATOR	PTFE	
INSULATOR	PTFE	
PIN CONTACT	PHOSPHOR BRONZE	GOLD
COVER	BRASS	NICKEL
BODY (FRONT)	BRASS	NICKEL
BODY (BACK)	BRASS	GOLD
DESCRIPTION	MATERIAL	FINISH



Full-covered

SPECIFICATIONS:

Electrical:
Frequency range: DC~4 GHz
Nominal Impedance: 50 ohms
Withstanding voltage: 335 V
Insulator Resistance: 1000 MΩ
VSWR: <1.3
Contact Resistance: 6 Milliohms max. (Center Contact)
1 Milliohms max. (Outer Contact)
Temperature Rating:
Operating temperature: -40°C to +85°C
Environmental:
Lead free, RoHS compliant.

RoHS COMPLIANT

UNLESS OTHERWISE SPECIFIED ALL DIMENSIONS ARE INCHES [MM]. TOLERANCES: EXCEPT AS NOTED

INCHES		HOLES	
.X	± .10	Ø.X	±.10
.XX	± .020	Ø.XX	±.015
.XXX	± .015	Ø.XXX	±.010

DRAWN	AY	11/1/18
CHECKED	IW	11/1/18
APPROVED		

THIS DRAWING CONTAINS INFORMATION THAT IS PROPRIETARY AND SHOULD NOT BE USED WITHOUT PRIOR WRITTEN PERMISSION FROM ADAM TECH

ADAM TECH
909 Rahway Avenue,
Union, NJ 07083
Phone: 908-687-5000
Fax: 908-687-5710

TITLE

FAKRA PLUG SMB TYPE RIGHT ANGLE, FOR PCB

SIZE	PART NO.	REV.
X	RF55-35X-T-00-50-SH	-

REF:	SCALE:	SHEET
S00134C	NTS	1 OF 1