Rev	AWO #	Description	Date	Appr
-	10525	RELEASED	7/09/10	

APPROVED: _____

DATE: _____ TITLE: _____

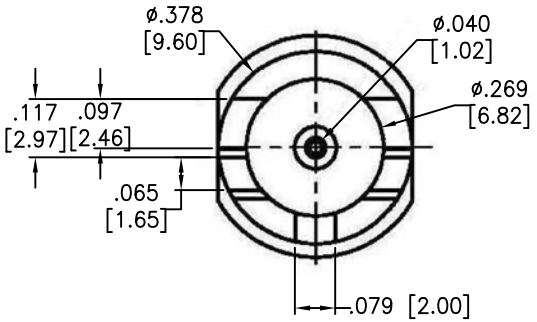

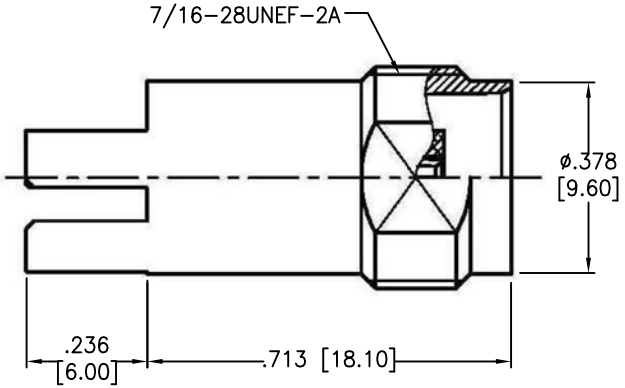

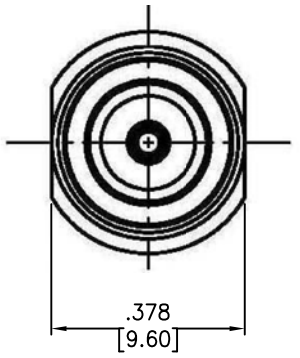

SPECIFICATIONS:

Electrical:
Nominal Impedance: 50 ohms
Frequency range: 0–11 GHz
Working Voltage: 500 VRMS max.
Dielectric Withstanding Voltage: 1500 VRMS min.
Contact Resistance: 1.5 Milliohms max. (Center Contact)
0.5 Milliohms max. (Outer Contact)
Insulator Resistance: 5000 Megohms min.
VSWR: 1.3 Max. from 0 ~ 4GHz
Insertion Loss: Dependant upon coaxial used
Temperature Range: –55°C to +125°C
Environmental:
Lead free, RoHS compliant. RoHS COMPLIANT

UNLESS OTHERWISE SPECIFIED
ALL DIMENSIONS ARE INCHES [MM]
TOLERANCES: EXCEPT AS NOTED

INCHES		HOLES	
.X	± .10	Ø.X	±.10
.XX	± .020	Ø.XX	±.015
.XXX	± .015	Ø.XXX	±.010

APPROVALS		DATE
DRAWN	DY	9/08/10
CHECKED		
APPROVED		

ADAM TECH
909 Rahway Avenue, Union, NJ 07083
Phone: 908-687-5000 Fax: 908-687-5710

TITLE: TNC FEMALE CONNECTOR

SIZE	PART NO.	REV.
X	RF7-17-T-00-50	-

REF: S00049T | SCALE: NTS | SHEET 1 OF 1