Rev	AWO #	Description	Date	Appr
-		RELEASED	9/21/18	

APPROVED: _____

DATE: _____ TITLE: _____

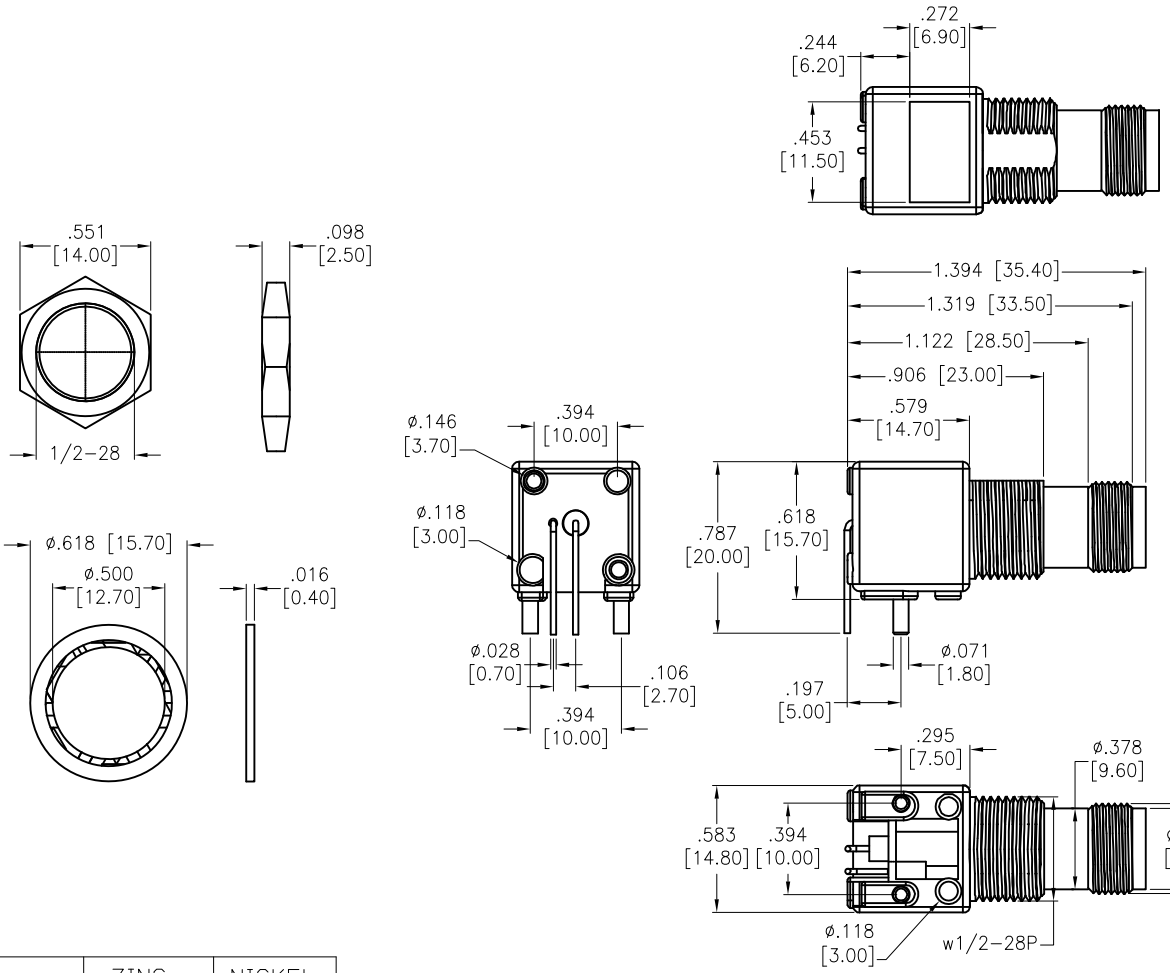

DESCRIPTION	MATERIAL	FINISH
BODY	ZINC	NICKEL
INSULATOR	POM	WHITE
PIN	BRASS	GOLD

SPECIFICATIONS:

Electrical:

Impedance: 50 ohm
Frequency range: 0~3GHz
VSWR: 1.3 Max
Working Voltage: 500V rms @ sea level
Insulator Resistance: 5000 ohms min
Temperature Range: -55°C to +105°C

Environmental:

Lead free, RoHS compliant.

RoHS COMPLIANT

UNLESS OTHERWISE SPECIFIED
ALL DIMENSIONS ARE INCHES [MM]
TOLERANCES: EXCEPT AS NOTED

INCHES		HOLES	
.X	± .10	Ø.X	±.10
.XX	± .020	Ø.XX	±.015
.XXX	± .015	Ø.XXX	±.010

APPROVALS		DATE
DRAWN	AY	9/21/18
CHECKED	NP	9/21/18
APPROVED		

ADAM TECH INTERCONNECTS
909 Rahway Avenue,
Union, NJ 07083
Phone: 908-687-5000
Fax: 908-687-5710

TITLE

TNC CONNECTOR DIP TYPE

SIZE	PART NO.	REV.
X	RF7-41-D-00-50-HDW	-

REF:	SCALE:	SHEET
S00128C	NTS	1 OF 1