Rev	AWO #	Description	Date	Appr
-		RELEASED	6/15/10	
A		UPDATE PCB LAYOUT DIM.	9/15/15	AY/YC

APPROVED: _____

DATE: _____ TITLE: _____

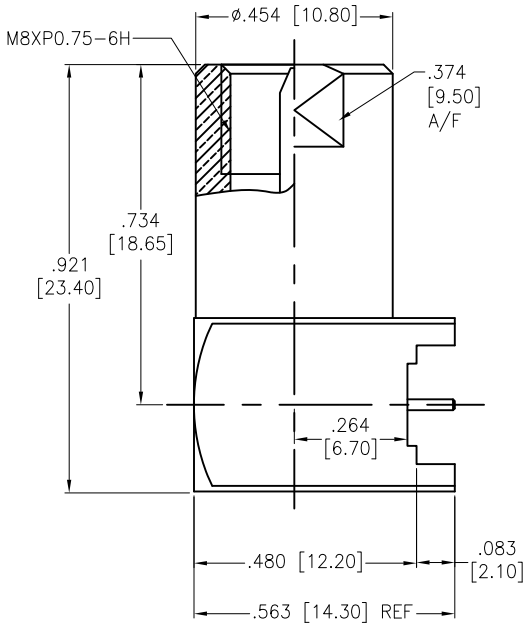

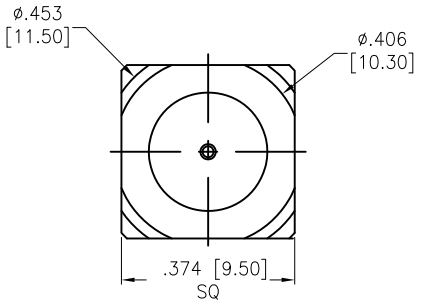

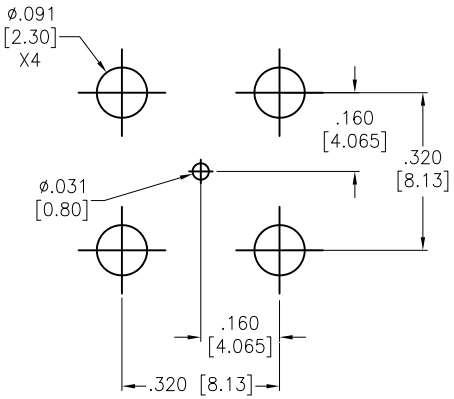

RECOMMENDED P.C.B LAYOUT

NO.	DESCRIPTION	MATERIAL	FINISH
5	INSULATOR	TEFLON	WHITE
4	CUBE BODY	BRASS	NICKEL
3	CONTACT PIN	BRASS	GOLD
2	INSULATOR	TEFLON	WHITE
1	BODY	BRASS	NICKEL

SPECIFICATIONS:

Electrical:

Nominal Impedance: 50 ohms
Frequency range: 0–4 GHz
Maximum peak voltage: 500V
Insulation resistance: 5000 Mohm min @ 500 VDC
Dielectric withstanding voltage: 1500 VAC rms
Operating temperature: –40°–85°

Environmental:

Lead free, RoHS compliant.

RoHS COMPLIANT

UNLESS OTHERWISE SPECIFIED
ALL DIMENSIONS ARE INCHES [MM]
TOLERANCES: EXCEPT AS NOTED

INCHES		HOLES	
.X	± .10	Ø.X	±.10
.XX	± .020	Ø.XX	±.015
.XXX	± .015	Ø.XXX	±.010

APPROVALS		DATE
DRAWN	AY	6/15/10
CHECKED		
APPROVED		

ADAM TECH
909 Rahway Avenue, Union, NJ 07083
Phone: 908-687-5000 Fax: 908-687-5710

TITLE: FME R/A P.C.B. MOUNT PLUG

SIZE	PART NO.	REV.
X	RF8-500-2	A

REF: S00092T | SCALE: NTS | SHEET 1 OF 1