APPROVED: _____

DATE: _____ TITLE: _____

Rev	AWO #	Description	Date	Appr
-		RELEASED	5/3/18	
A		UPDATE DIM.	5/17/18	AY/MY

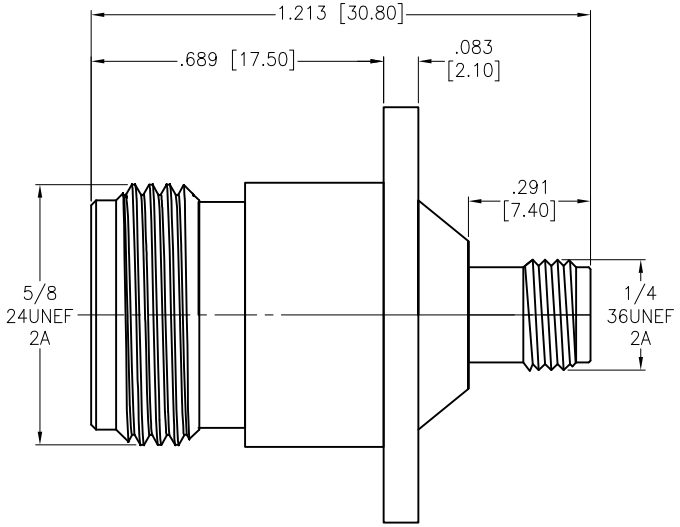

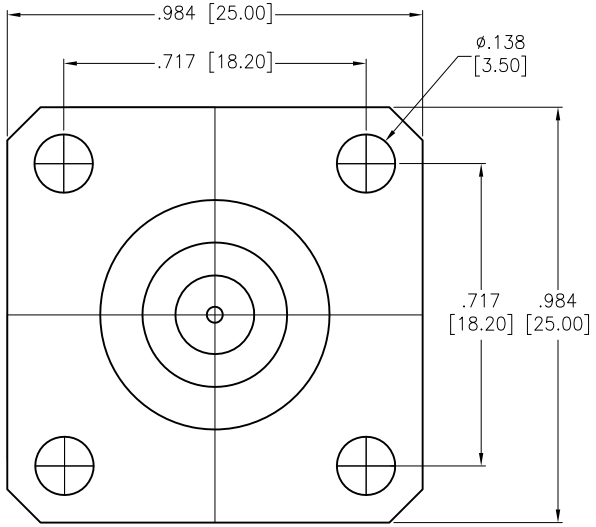

DESCRIPTION	MATERIAL	FINISH
PIN	BRASS	GOLD
INSULATOR	TEFLON	WHITE
BODY	BRASS	NICKEL

SPECIFICATIONS:

Electrical:

Nominal Impedance: 50 ohms

Frequency range: 0–6 GHz

VSWR: 1.25 max

Working Voltage: <170 Vrms @ sea level

Insulator Resistance: 5,000 ohms min

Temperature Rating:

–65°C to +165°C

Environmental:

Lead free, RoHS compliant.

RoHS COMPLIANT

UNLESS OTHERWISE SPECIFIED
ALL DIMENSIONS ARE INCHES [MM]
TOLERANCES: EXCEPT AS NOTED

INCHES		HOLES	
.X	± .10	Ø.X	±.10
.XX	± .020	Ø.XX	±.015
.XXX	± .015	Ø.XXX	±.010

APPROVALS		DATE
DRAWN	HR	5/3/18
CHECKED	MY	5/3/18
APPROVED		

ADAM TECH INTERCONNECTS
909 Rahway Avenue,
Union, NJ 07083
Phone: 908-687-5000
Fax: 908-687-5710

TITLE

TNC JACK TO SMA JACK ADAPTER

SIZE	PART NO.	REV.
X	RF99-21-T-AS-50	A

REF:	SCALE:	SHEET
S00128C	NTS	1 OF 1