Rev	AWO #	Description	Date	Appr
-		RELEASED	12/1/21	

APPROVED: _____

DATE: _____ TITLE: _____

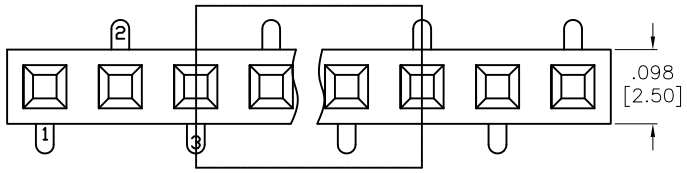

RS1-B2-XX-G-SMT-B-PP

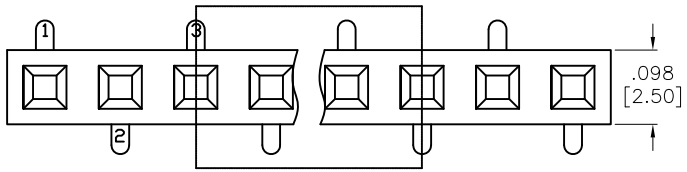

RS1-B2-XX-G-SMT-A-PP

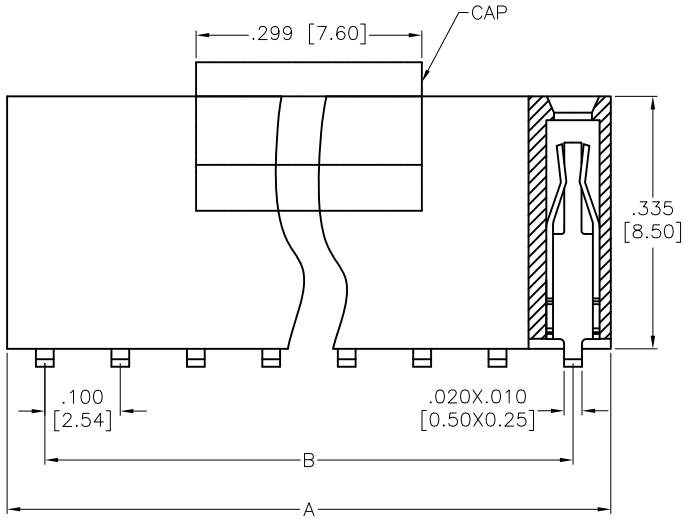

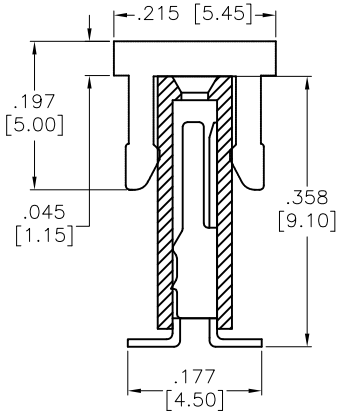

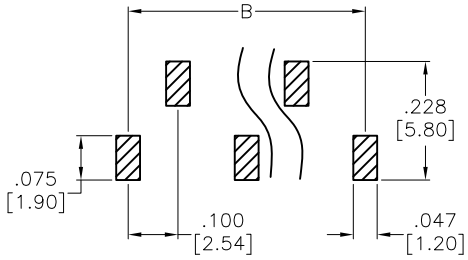

RS1-B2-XX-G-SMT-B-PP

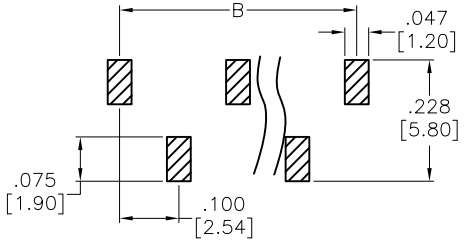

RS1-B2-XX-G-SMT-A-PP

RECOMMENDED P.C.B LAYOUT

SPECIFICATIONS:
Material:
Insulator: Hi-temp thermoplastic, rated UL 94V-0
Insulator color: Black
Contacts: Phosphor Bronze
Plating:
Gold flash over Nickel underplate overall
Electrical:
Current rating: 3 Amp.
Contact resistance: 20 mohms max.
Insulation resistance: 1,000 Mohms min.
Dielectric withstanding voltage: 500 VAC
Temperature Rating:
-40°C to +105°C
Environmental:
Lead free, RoHS compliant

RoHS COMPLIANT

Positions: 02 thru 40
A = .100 [2.54] x No. of Positions + .020 [0.50]
B = .100 [2.54] x No. of Spaces

UNLESS OTHERWISE SPECIFIED
ALL DIMENSIONS ARE INCHES [MM]
TOLERANCES: EXCEPT AS NOTED

INCHES		HOLES	
.X	± .10	Ø.X	±.10
.XX	± .020	Ø.XX	±.015
.XXX	± .015	Ø.XXX	±.010

APPROVALS		DATE
DRAWN	LH	12/1/21
CHECKED	LW	12/1/21
APPROVED		

ADAM TECH INTERCONNECTS
909 Rahway Avenue,
Union, NJ 07083
Phone: 908-687-5000
Fax: 908-687-5710

TITLE
.100 [2.54] RECEPTACLE STRIP, SINGLE ROW, TYPE B2
.335 [8.50] HEIGHT, GOLD PLATED, SMT TYPE

SIZE	PART NO.	REV.
X	RS1-B2-XX-G-SMT-X-PP	-

REF:	SCALE:	SHEET
S00111C	NTS	1 OF 1