APPROVED: _____

DATE: _____ TITLE: _____

Rev	AWO #	Description	Date	Appr
-		RELEASED	1/4/19	
A		UPDATE DIM.	1/24/19	AY/YC
B		UPDATE DRAWING	7/5/21	WX/TL

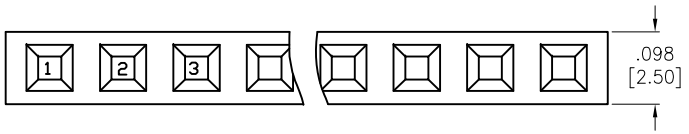

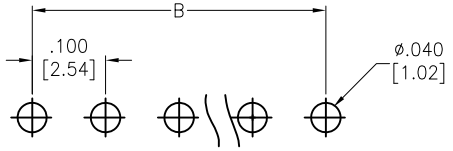

RECOMMENDED PCB LAYOUT

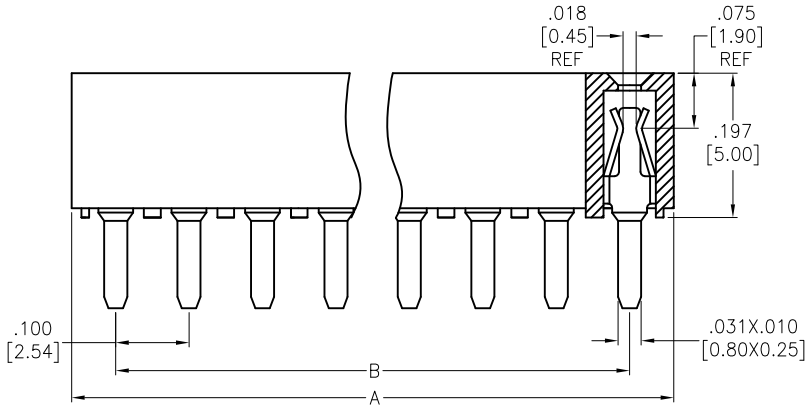

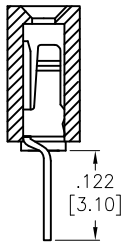

SPECIFICATIONS:
Material:
Insulator: Hi–Temp Thermoplastic, rated UL 94V–0
Insulator color: Black
Contacts: Copper Alloy
Plating:
Gold flash over Nickel underplate overall
Electrical:
Current rating: 3 Amp
Contact resistance: 20 mohms max
Insulation resistance: 1,000 Mohms min
Dielectric withstanding voltage: 500 VAC for 1 minute
Temperature Rating:
–40°C to +105°C
Environmental:
Lead free, RoHS compliant RoHS COMPLIANT

Positions: 01 thru 40
A= .100 [2.54] x No. of Positions + .020 [0.50]
B= .100 [2.54] x No. of Space

UNLESS OTHERWISE SPECIFIED ALL DIMENSIONS ARE INCHES [MM]. TOLERANCES: EXCEPT AS NOTED

INCHES		HOLES	
.X	± .10	Ø.X	±.10
.XX	± .020	Ø.XX	±.015
.XXX	± .015	Ø.XXX	±.010

DRAWN	AY	1/17/19
CHECKED	IL	1/17/19
APPROVED		

THIS DRAWING CONTAINS INFORMATION THAT IS PROPRIETARY AND SHOULD NOT BE USED WITHOUT PRIOR WRITTEN PERMISSION FROM ADAM TECH

ADAM TECH
909 Rahway Avenue,
Union, NJ 07083
Phone: 908-687-5000
Fax: 908-687-5710

TITLE: .100 SINGLE ROW RECEPTACLE STRIP
.197 [5.00] HEIGHT, GOLD PLATED

SIZE	PART NO.	REV.
X	RS1B-D2-XX-G-.122-HT	B

REF:	SCALE:	SHEET
S00111C	NTS	1 OF 1