Rev	AWO #	Description	Date	Appr
-		RELEASED	4/28/22	

APPROVED: _____

DATE: _____ TITLE: _____

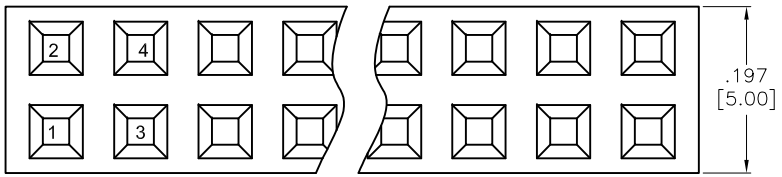

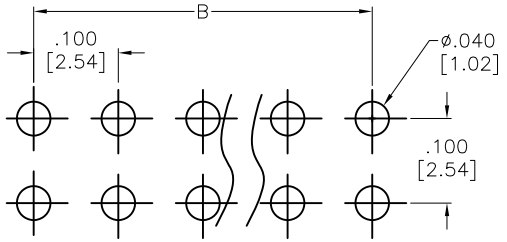

RECOMMENDED PCB LAYOUT

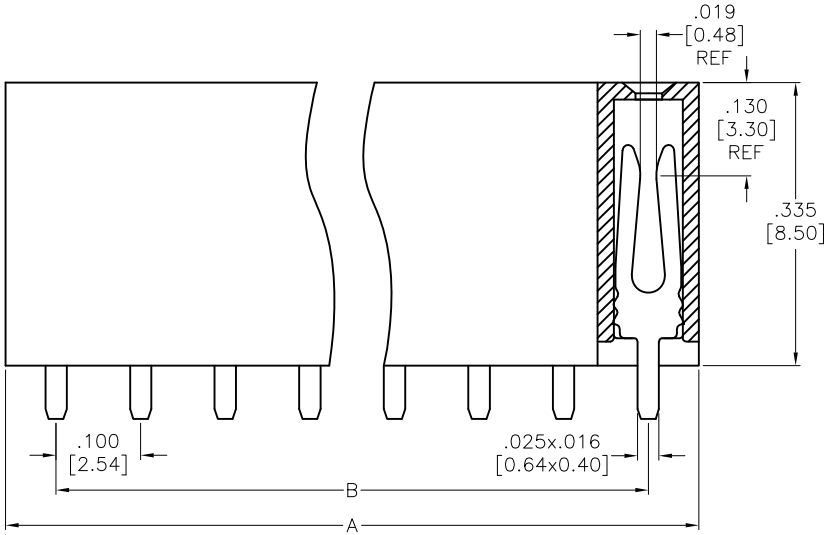

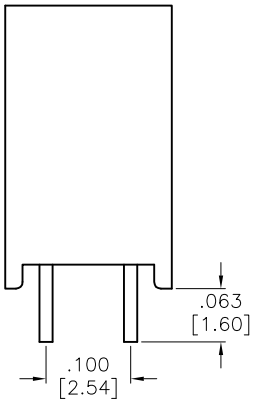

SPECIFICATIONS:
Material:
Insulator: Hi-Temp PA9T Thermoplastic, rated UL 94V-0
Insulator color: Black
Contacts: Copper Alloy
Plating:
Gold over Nickel underplate on contact area,
Tin over Copper underplate on solder tails
Electrical:
Current rating: 3 Amp
Contact resistance: 20 mohms max
Insulation resistance: 1,000 Mohms min
Dielectric withstanding voltage: 500 VAC For 1 Minute
Temperature Rating:
-40°C to +105°C
Recommended Solderin Temp:
260°C Peak for 3 sec. max.
Environmental:
Lead free, RoHS compliant

RoHS COMPLIANT

Positions: 04 thru 80
A = .100 [2.54] x No. of Positions Per row + .020 [0.50]
B = .100 [2.54] x No. of Spaces

UNLESS OTHERWISE SPECIFIED ALL DIMENSIONS ARE INCHES [MM]. TOLERANCES: EXCEPT AS NOTED

INCHES		HOLES	
.X	± .10	Ø.X	±.10
.XX	± .020	Ø.XX	±.015
.XXX	± .015	Ø.XXX	±.010

ADAM TECH
909 Rahway Avenue,
Union, NJ 07083
Phone: 908-687-5000
Fax: 908-687-5710

DRAWN	LH	4/28/22
CHECKED	KL	4/28/22
APPROVED		

THIS DRAWING CONTAINS INFORMATION THAT IS PROPRIETARY AND SHOULD NOT BE USED WITHOUT PRIOR WRITTEN PERMISSION FROM ADAM TECH

TITLE: .100 [2.54] RECEPTACLE STRIP, DUAL ROW .335 [8.50] HEIGHT, SEL-GOLD PLATED

SIZE	PART NO.	REV.
X	RS2-A5-XX-SG-.063-HT	-

REF: S00111C | SCALE: NTS | SHEET 1 OF 1