Rev	AWO #	Description	Date	Appr
-		RELEASED	12/1/21	

APPROVED: _____

DATE: _____ TITLE: _____

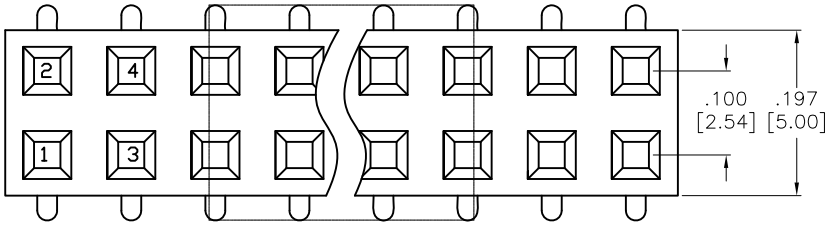

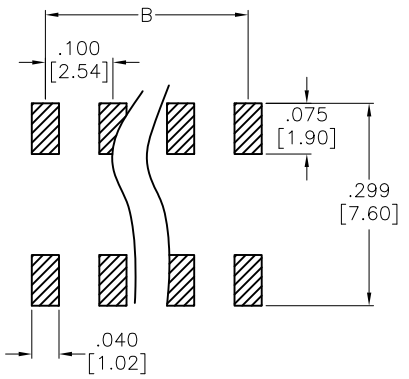

RECOMMENDED PCB LAYOUT

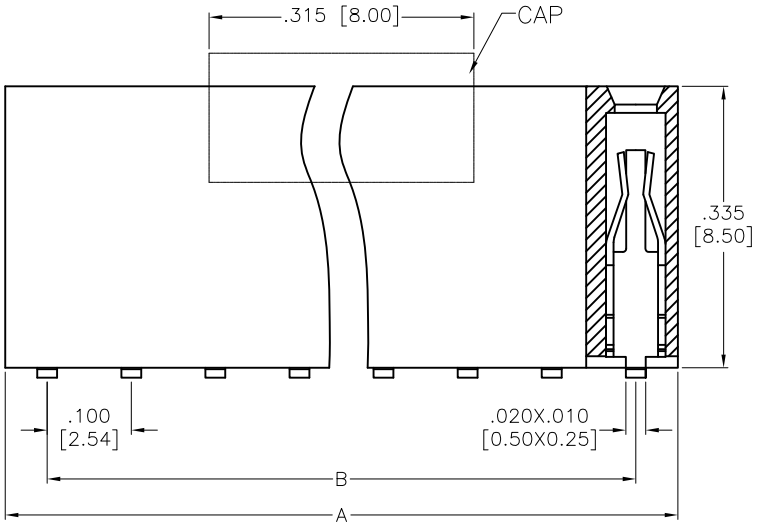

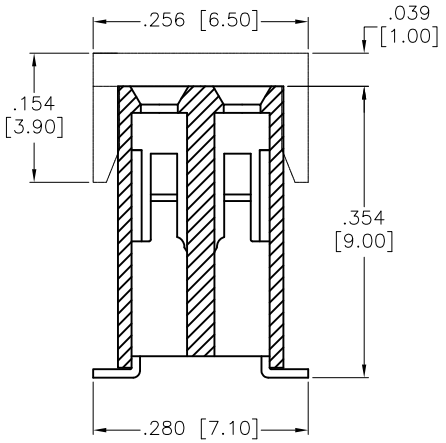

SPECIFICATIONS:
Material:
Insulator: Hi-temp thermoplastic, rated UL 94V-0
Insulator color: Black
Contacts: Phosphor Bronze
Plating:
Gold flash over Nickel underplate overall
Electrical:
Current rating: 3 Amp.
Contact resistance: 20 mohms max.
Insulation resistance: 1000 Mohms min.
Dielectric withstanding voltage: 500 VAC.
Temperature Rating:
Operating temperature: -40°C to +105°C
Environmental:
Lead free, RoHS compliant RoHS COMPLIANT

Positions: 04 thru 80
A = .100 [2.54] x No. of Positions Per row +.020 [0.50]
B = .100 [2.54] x No. of Spaces

UNLESS OTHERWISE SPECIFIED ALL DIMENSIONS ARE INCHES [MM]. TOLERANCES: EXCEPT AS NOTED

INCHES		HOLES	
.X	± .10	Ø.X	±.10
.XX	± .020	Ø.XX	±.015
.XXX	± .015	Ø.XXX	±.010

ADAM TECH
909 Rahway Avenue,
Union, NJ 07083
Phone: 908-687-5000
Fax: 908-687-5710

DRAWN	LH	12/1/21
CHECKED	LW	12/1/21
APPROVED		

THIS DRAWING CONTAINS INFORMATION THAT IS PROPRIETARY AND SHOULD NOT BE USED WITHOUT PRIOR WRITTEN PERMISSION FROM ADAM TECH

TITLE: .100 [2.54] RECEPTACLE STRIP, DUAL ROW .335 [8.50] HEIGHT, GOLD PLATED, SMT

SIZE	PART NO.	REV.
X	RS2-XX-G-SMT-001Y-PP	-

REF: S00111C | SCALE: NTS | SHEET 1 OF 1