APPROVED: _____

DATE: _____ TITLE: _____

Rev	AWO #	Description	Date	Appr
-		RELEASED	12/18/20	
A		UPDATE DRAWING	9/8/21	JJ/TL
B		UPDATED SPEC.	12/15/22	JJ/TL

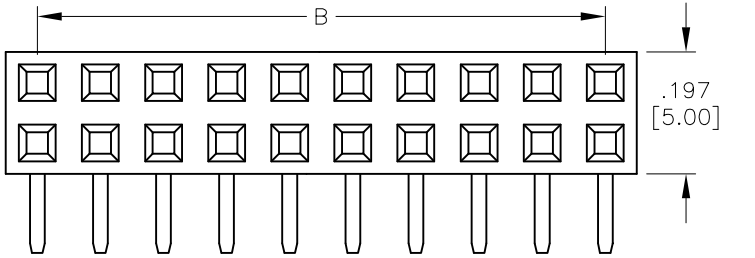

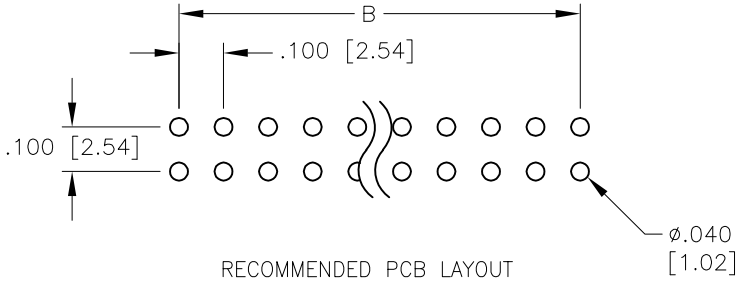

RECOMMENDED PCB LAYOUT

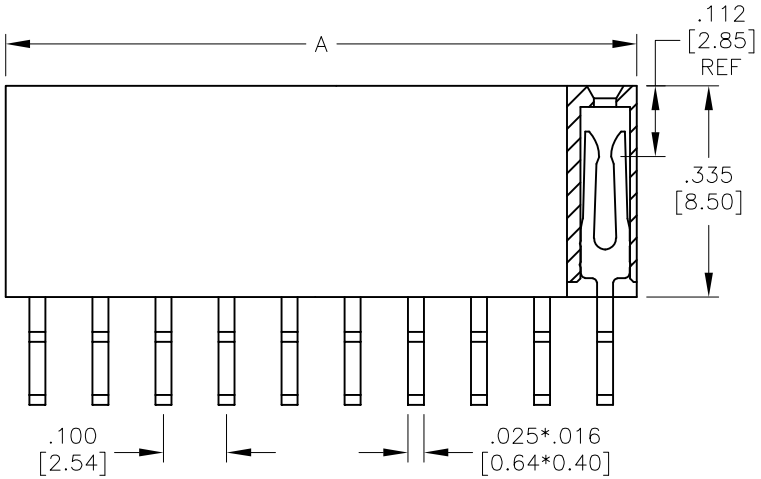

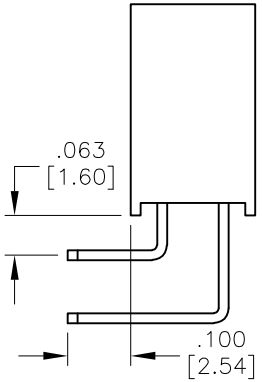

SPECIFICATIONS:

Material:

Insulator: Hi-temp thermoplastic, rated UL 94V-0

Insulator color: Black

Contacts: Brass

Plating:

3u" Gold over Nickel underplate on contact area, Matte Tin over Copper underplate on tails.

Electrical:

Current rating: 3 Amps max.

Contact resistance: 20 mohms max. initial

Insulation resistance: 1,000 Mohms min.

Dielectric withstanding voltage: 500 VAC

Temperature Rating:

Operating temperature: -40°C to +105°C (B)

Environmental:

Lead free, RoHS compliant RoHS COMPLIANT

Positions: 02 thru 80

A = .100 [2.54] x No. of Positions per Row + .016 [0.40]

B = .100 [2.54] x No. of Spaces

UNLESS OTHERWISE SPECIFIED ALL DIMENSIONS ARE INCHES [MM]. TOLERANCES: EXCEPT AS NOTED

INCHES		HOLES	
.X	± .10	Ø.X	±.10
.XX	± .020	Ø.XX	±.015
.XXX	± .015	Ø.XXX	±.010

DRAWN	OW	12/18/20
CHECKED	TL	12/18/20
APPROVED		

THIS DRAWING CONTAINS INFORMATION THAT IS PROPRIETARY AND SHOULD NOT BE USED WITHOUT PRIOR WRITTEN PERMISSION FROM ADAM TECH

ADAM TECH
909 Rahway Avenue,
Union, NJ 07083
Phone: 908-687-5000
Fax: 908-687-5710

TITLE: .100 x .100 DUAL ROW RECEPTACLE STRIP RIGHT ANGLE, .335 [8.50] HEIGHT

SIZE	PART NO.	REV.
X	RS2R-XX-SGM-.100-3	B

REF: S00181C | SCALE: NTS | SHEET 1 OF 1