APPROVED: _____

DATE: _____ TITLE: _____

Rev	AWO #	Description	Date	Appr
-		RELEASED	11/7/14	
A		UPDATE DRAWING	7/25/17	AY/NL

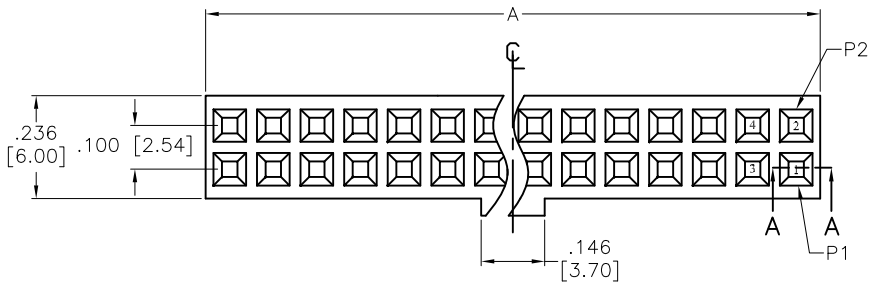

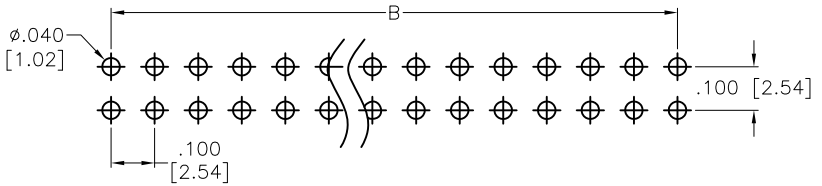

RECOMMENDED PCB LAYOUT

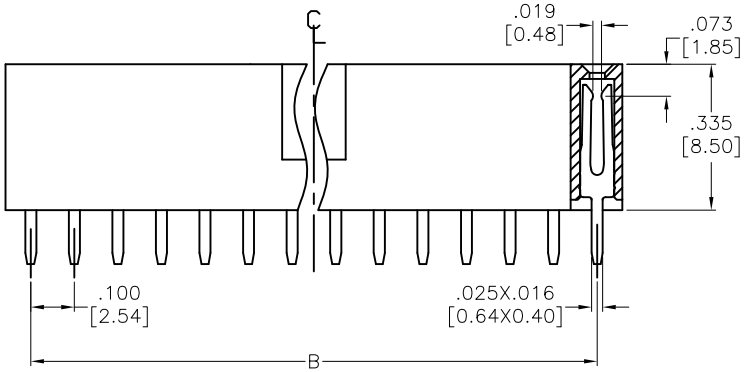

SECTION A–A

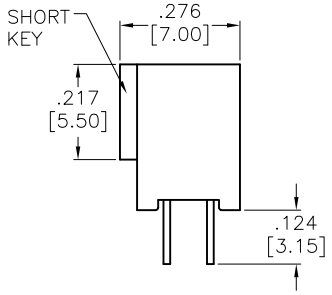

SPECIFICATIONS:
Material:
Insulator: PBT, glass reinforced, rated UL 94V–0
Insulator color: Black
Contacts: Copper Alloy
Plating:
Gold flash over Nickel underplate overall
Electrical:
Current rating: 3 Amp.
Contact resistance: 20 mohms max.
Insulation resistance: 1,000 Mohms min.
Dielectric withstanding voltage: 1,000 VAC for 1 minute
Temperature Rating:
Operating temperature: –40°C to +105°C
Environmental:
Lead free, RoHS compliant

RoHS COMPLIANT

Positions: 04 thru 80
A = .100 [2.54] x No. of Positions per Row + .016 [0.40]
B = .100 [2.54] x No. of Spaces

UNLESS OTHERWISE SPECIFIED
ALL DIMENSIONS ARE INCHES [MM]
TOLERANCES: EXCEPT AS NOTED

INCHES		HOLES	
.X	± .10	Ø.X	±.10
.XX	± .020	Ø.XX	±.015
.XXX	± .015	Ø.XXX	±.010

APPROVALS		DATE
DRAWN	AY	11/7/14
CHECKED	GC	11/7/14
APPROVED		

ADAM TECH
909 Rahway Avenue, Union, NJ 07083
Phone: 908-687-5000 Fax: 908-687-5710

TITLE
.100 x .100 DUAL ROW RECEPTACLE STRIP
.335 [8.50] HEIGHT, KEYED CORNER CONTACTS

SIZE	PART NO.	REV.
X	RSB-A-XX-G-SK	A

REF:	SCALE:	SHEET
S00019C	NTS	1 OF 1