Rev	AWO #	Description	Date	Appr
-		RELEASED	6/30/21	

APPROVED: _____

DATE: _____ TITLE: _____

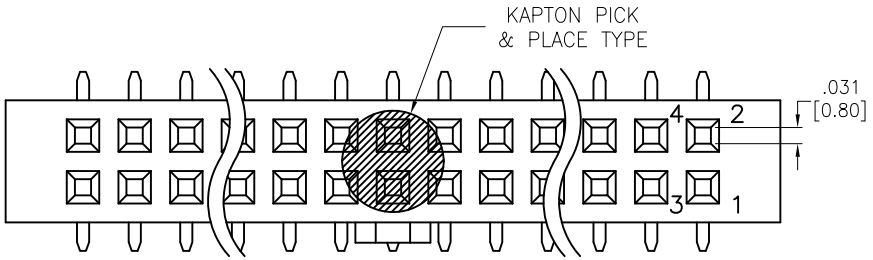

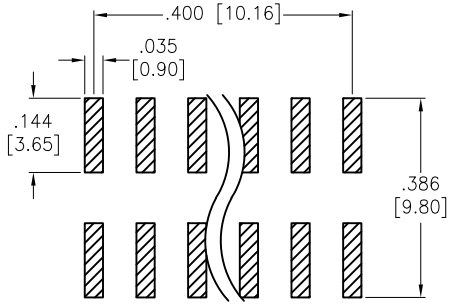

RECOMMENDED PCB LAYOUT

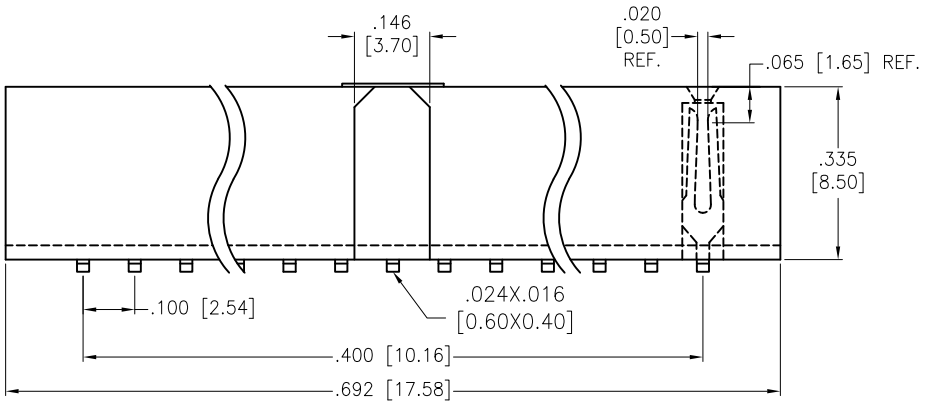

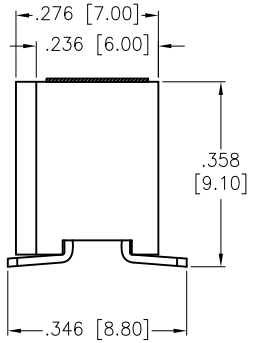

SPECIFICATIONS:
Material:
Insulator: Nylon 6T, rated UL 94V-0
Insulator color: Black
Contacts: Phosphor Bronze
Plating:
Gold flash over Nickel underplate overall
Electrical:
Current rating: 3 Amps max.
Contact resistance: 20 mohms max. initial
Insulation resistance: 1,000 Mohms min.
Dielectric withstanding voltage: 600 VAC for 1 minute
Temperature Rating:
Operating temperature: -40°C to +105°C
Environmental:
Lead free, RoHS compliant
Recommended soldering temp: 260°C for 5 seconds

RoHS COMPLIANT

Positions: 06 thru 72
A = .100 [2.54] x No. of Positions per Row + .192 [4.88]
B = .100 [2.54] x No. of Spaces

UNLESS OTHERWISE SPECIFIED ALL DIMENSIONS ARE INCHES [MM]. TOLERANCES: EXCEPT AS NOTED

INCHES		HOLES	
.X	± .10	Ø.X	±.10
.XX	± .020	Ø.XX	±.015
.XXX	± .015	Ø.XXX	±.010

DRAWN	LH	6/30/21
CHECKED	NL	6/30/21
APPROVED		

THIS DRAWING CONTAINS INFORMATION THAT IS PROPRIETARY AND SHOULD NOT BE USED WITHOUT PRIOR WRITTEN PERMISSION FROM ADAM TECH

ADAM TECH
909 Rahway Avenue,
Union, NJ 07083
Phone: 908-687-5000
Fax: 908-687-5710

TITLE: .100 x .100 DUAL ROW RECEPTACLE STRIP
.335 [8.50] HEIGHT, SMT TYPE

SIZE	PART NO.	REV.
X	RSB-XX-G-SMT-KT-T/R	-

REF: S00032T | SCALE: NTS | SHEET 1 OF 2

Rev	AWO #	Description	Date	Appr
SEE SHT 1 OF 2 FOR REVISION				

APPROVED: _____

DATE: _____ TITLE: _____

FOR: RSB-10-G-SMT-KT-T/R

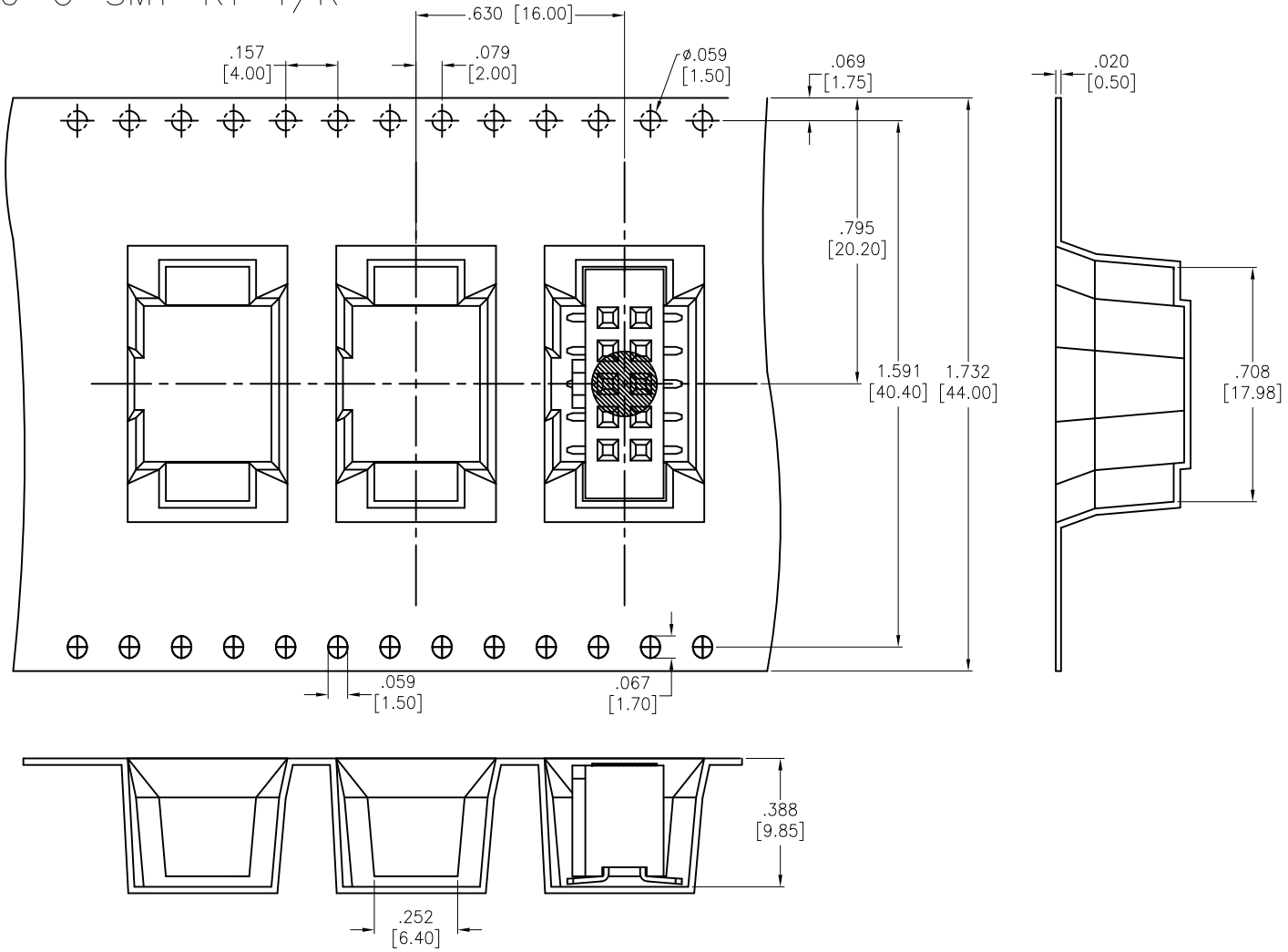

NOTE:
1. 10 sprocket hole pitch cumulative tolerance ±0.20mm
2. Carrier camber is 1mm in 250mm
3. Carrier material: PS, Black,
4. All dimensions meet EIA-481-B
5. 13"/1R = 7.4m, 400 Pcs

UNLESS OTHERWISE SPECIFIED ALL DIMENSIONS ARE INCHES [MM]. TOLERANCES: EXCEPT AS NOTED

INCHES		HOLES	
.X	± .10	ØX	±.10
.XX	± .020	ØXX	±.015
.XXX	± .015	ØXXX	±.010

DRAWN	LH	6/30/21
CHECKED	KL	6/30/21
APPROVED		

THIS DRAWING CONTAINS INFORMATION THAT IS PROPRIETARY AND SHOULD NOT BE USED WITHOUT PRIOR WRITTEN PERMISSION FROM ADAM TECH

ADAM TECH
909 Rahway Avenue,
Union, NJ 07083
Phone: 908-687-5000
Fax: 908-687-5710

TITLE: .100 x .100 DUAL ROW RECEPTACLE STRIP .335 [8.50] HEIGHT, SMT TYPE

SIZE	PART NO.	REV.
X	RSB-XX-G-SMT-KT-T/R	-

REF:	SCALE:	SHEET
S00032T	NTS	2 OF 2