Rev	AWO #	Description	Date	Appr
-		RELEASED	8/3/17	

APPROVED: _____

DATE: _____ TITLE: _____

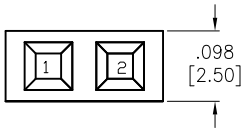

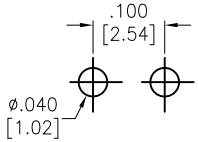

RECOMMENDED PCB LAYOUT

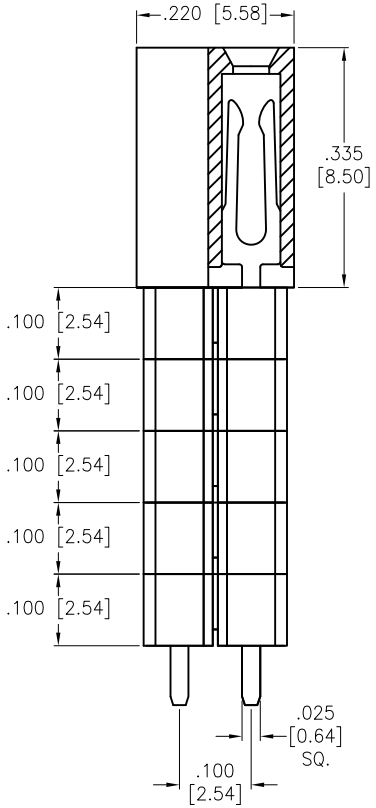

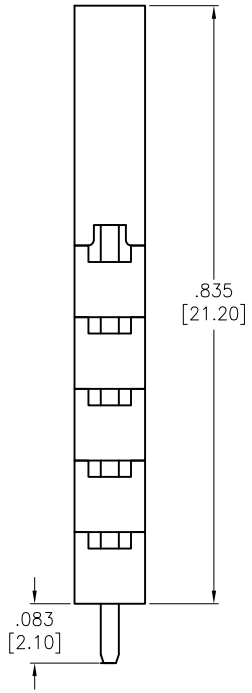

SPECIFICATIONS:
Material:
Insulator: Hi-Temp Thermoplastic, rated UL 94V-0
Insulator color: Black
Contacts: Bronze
Plating:
Gold flash over Nickel underplate overall
Electrical:
Current rating: 3 Amp
Contact resistance: 20 mohms max
Insulation resistance: 1,000 Mohms min
Dielectric withstanding voltage: 500 VAC
Temperature Rating:
Operating temperature: -40°C to +105°C
Environmental:
Lead free, RoHS compliant

RoHS COMPLIANT

UNLESS OTHERWISE SPECIFIED
ALL DIMENSIONS ARE INCHES [MM]
TOLERANCES: EXCEPT AS NOTED

INCHES		HOLES	
.X	± .10	Ø.X	±.10
.XX	± .020	Ø.XX	±.015
.XXX	± .015	Ø.XXX	±.010

APPROVALS		DATE
DRAWN	HR	8/3/17
CHECKED	DH	8/3/17
APPROVED		

ADAM TECH
909 Rahway Avenue, Union, NJ 07083
Phone: 908-687-5000 Fax: 908-687-5710

TITLE: .100 x .100 SINGLE ROW RECEPTACLE STRIP ELEVATED SOCKET, 5 INSULATORS

SIZE	PART NO.	REV.
X	RSE1-5-02-G-.083-HT	-

REF: S00111C | SCALE: NTS | SHEET 1 OF 1