Rev	AWO #	Description	Date	Appr
-		RELEASED	6/2/05	
A		REVISED DIM.	4/2/14	HR/AY

APPROVED: _____

DATE: _____ TITLE: _____

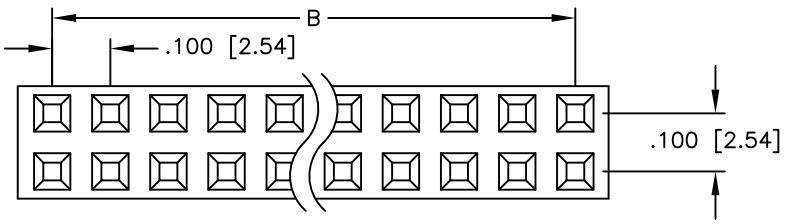

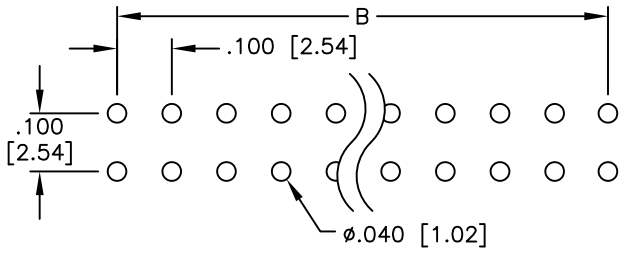

RECOMMENDED
PCB LAYOUT

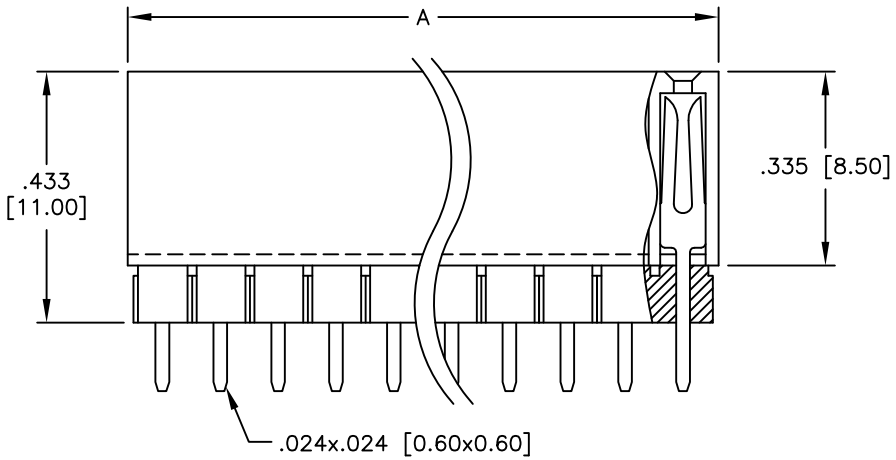

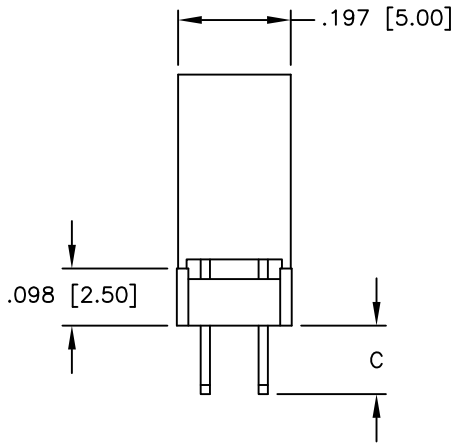

PART NUMBER	DIMENSION
	C
RSE2-1-XX-SG-1	.118 [3.00]
RSE2-1-XX-SG-2	.315 [8.00]
RSE2-1-XX-SG-3	.448 [11.40]

Positions: 02 thru 80
A = .100 [2.54] x No. of Positions per Row + .020 [0.50]
B = .100 [2.54] x No. of Spaces

SPECIFICATIONS:
Material:
Insulator: PBT, glass reinforced, rated UL 94V–0
Insulator color: Black
Contacts: Brass
Plating:
Gold flash over Nickel underplate on contact area, Tin over Copper underplate on tails
Electrical:
Operating voltage: 250 VAC max.
Current rating: 3 Amps max.
Contact resistance: 20 mohms max. initial
Insulation resistance: 5,000 Mohms min.
Dielectric withstanding voltage: 1,000 VAC for 1 minute
Temperature Rating:
Operating temperature: –40°C to +105°C
Environmental:
Lead free, RoHS compliant

RoHS COMPLIANT

UNLESS OTHERWISE SPECIFIED
ALL DIMENSIONS ARE INCHES [MM]
TOLERANCES: EXCEPT AS NOTED

INCHES		HOLES	
.X	± .10	Ø.X	±.10
.XX	± .020	Ø.XX	±.015
.XXX	± .015	Ø.XXX	±.010

APPROVALS		DATE
DRAWN	SS	6/2/05
CHECKED		
APPROVED		

ADAM TECH
909 Rahway Avenue, Union, NJ 07083
Phone: 908-687-5000 Fax: 908-687-5710

TITLE: .100 x .100 DUAL ROW RECEPTACLE STRIP ELEVATED SOCKET, 1 INSULATOR

SIZE	PART NO.	REV.
X	RSE2-1-XX-SG-X	A

REF: | SCALE: NTS | SHEET 1 OF 1