Rev	AWO #	Description	Date	Appr
-		RELEASED	8/3/17	

APPROVED: _____

DATE: _____ TITLE: _____

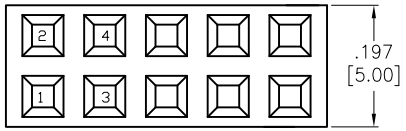

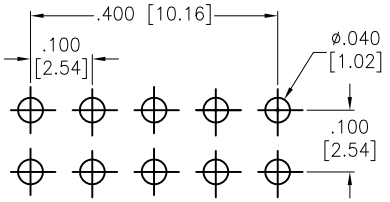

RECOMMENDED PCB LAYOUT

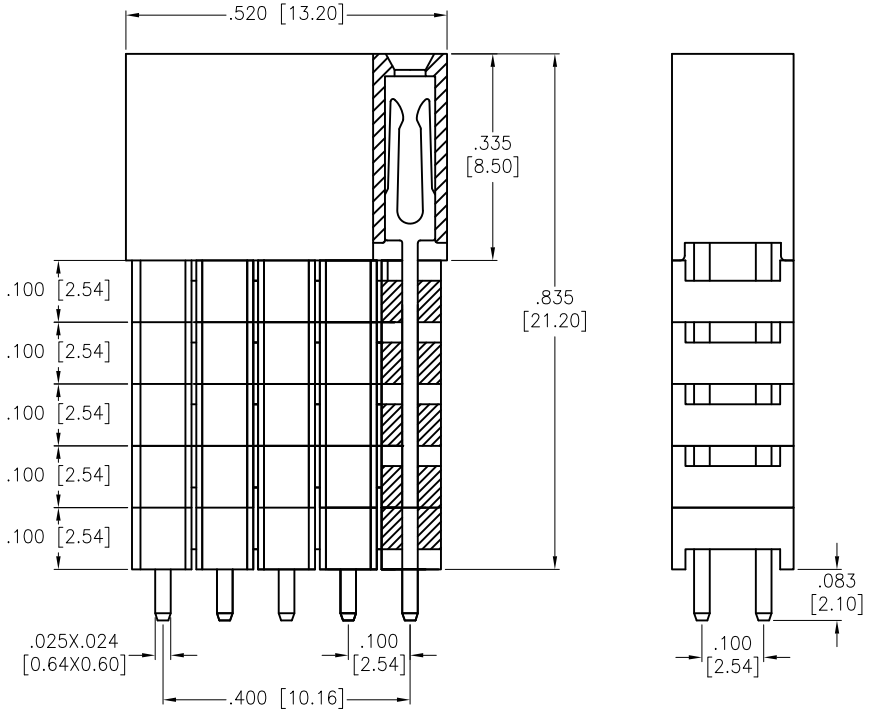

SPECIFICATIONS:

Material:

Insulator: Hi-Temp Thermoplastic, rated UL 94V-0

Insulator color: Black

Contacts: Phosphor Bronze

Plating:

Gold flash over Nickel underplate overall

Electrical:

Current rating: 3 Amp

Contact resistance: 20 mohms max

Insulation resistance: 1,000 Mohms min

Dielectric withstanding voltage: 500 VAC

Temperature Rating:

Operating temperature: -40°C to +105°C

Environmental:

Lead free, RoHS compliant

RoHS COMPLIANT

UNLESS OTHERWISE SPECIFIED
ALL DIMENSIONS ARE INCHES [MM]
TOLERANCES: EXCEPT AS NOTED

INCHES		HOLES	
.X	± .10	Ø.X	±.10
.XX	± .020	Ø.XX	±.015
.XXX	± .015	Ø.XXX	±.010

APPROVALS		DATE
DRAWN	HR	8/3/17
CHECKED	DH	8/3/17
APPROVED		

ADAM TECH
909 Rahway Avenue, Union, NJ 07083
Phone: 908-687-5000 Fax: 908-687-5710

TITLE: .100 x .100 DUAL ROW RECEPTACLE STRIP ELEVATED SOCKET, 5 INSULATORS

SIZE	PART NO.	REV.
X	RSE2-5-10-G-.083-HT	-

REF: S00111C | SCALE: NTS | SHEET 1 OF 1