APPROVED: _____

DATE: _____ TITLE: _____

| Rev | AWO # | Description | Date | Appr |
|---|---|---|---|---|
| - | | RELEASED | 9/4/17 | |
| A | | UPATE CAP DRAWING | 4/9/21 | LH/DH |

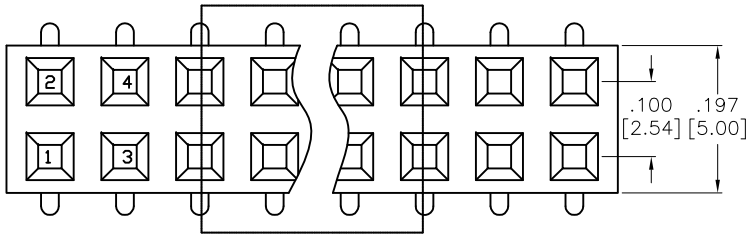


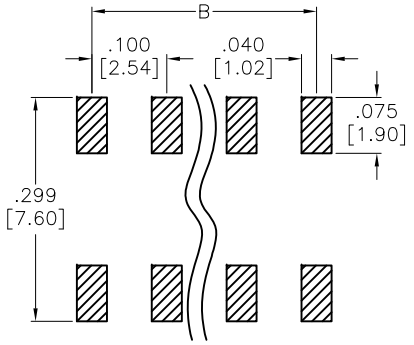


RECOMMENDED PCB LAYOUT

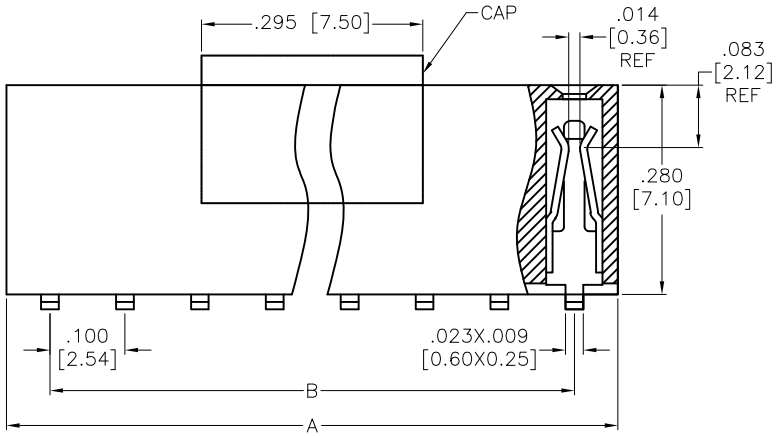


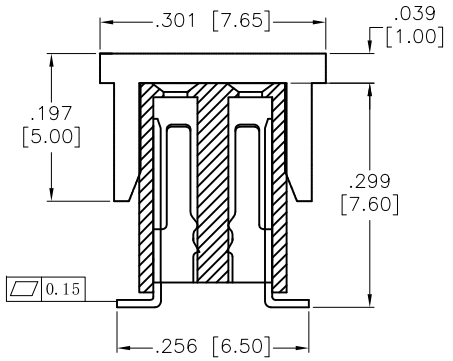


SPECIFICATIONS:

Material:

Insulator: Hi-temp thermoplastic, rated UL 94V-0

Insulator color: Black

Contacts: Copper Alloy

Plating:

Gold flash over Nickel underplate on contact area,
Tin over Nickel underplate on solder tails

Electrical:

Rated Current: 3 Amp

Contact resistance: 20 mohms max

Insulation resistance: 1,000 Mohms min

Dielectric withstanding voltage: 500 VAC For 1 Minute

Temperature Rating:

-40°C to +105°C

Environmental:

Lead free, RoHS compliant. RoHS COMPLIANT

PACKAGED ON TAPE & REEL

Positions: 04 thru 80

A=.100 [2.54] X No. of Positions Per row + .012 [0.30]

B=.100 [2.54] X No. of Spaces

UNLESS OTHERWISE SPECIFIED ALL DIMENSIONS ARE INCHES [MM]. TOLERANCES: EXCEPT AS NOTED

| INCHES | | HOLES | |
|---|---|---|---|
| .X | ± .10 | Ø.X | ±.10 |
| .XX | ± .020 | Ø.XX | ±.015 |
| .XXX | ± .015 | Ø.XXX | ±.010 |

| | | |
|---|---|---|
| DRAWN | AY | 9/4/17 |
| CHECKED | OC | 9/4/17 |
| APPROVED | | |

THIS DRAWING CONTAINS INFORMATION THAT IS PROPRIETARY AND SHOULD NOT BE USED WITHOUT PRIOR WRITTEN PERMISSION FROM ADAM TECH

ADAM TECH
909 Rahway Avenue,
Union, NJ 07083
Phone: 908-687-5000
Fax: 908-687-5710

TITLE: .100 X .100 DUAL ROW FEMALE HEADER SMT, SEL GOLD PLATED

| SIZE | PART NO. | REV. |
|---|---|---|
| X | RSM2-C-XX-SG-SMT-PP-T/R | A |

REF: S00111C | SCALE: NTS | SHEET 1 OF 1