Blade Circuit Breaker

MOCBP4-PL

Mechanical Dimensions: Inches [mm]

Unless otherwise specified all tolerances are +/- 0.02in (0.5mm)

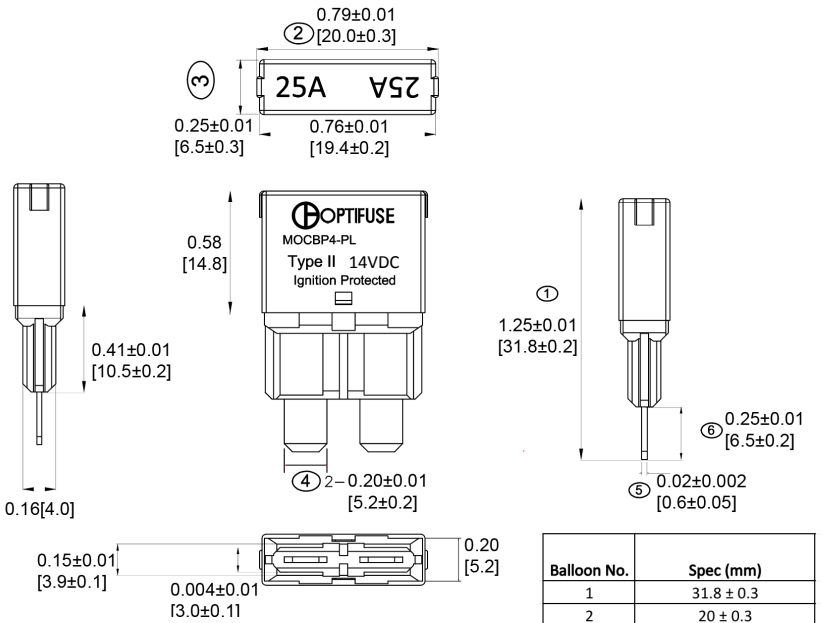

Balloon No.	Spec (mm)
1	31.8 ± 0.3
2	20 ± 0.3
3	6.5 ± 0.3
4	5.2 ± 0.2
5	0.6 ± 0.05
6	6.5 ± 0.2

Circuit Diagram

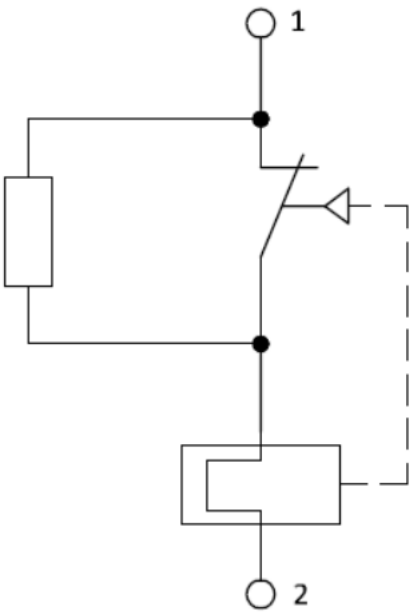

Part Numbers Information

Optifuse P/N	Amperage	Body Color
MOCBP4-PL-5A	5	Light Brown
MOCBP4-PL-6A	6	Moss Green
MOCBP4-PL-7.5A	7.5	Brown
MOCBP4-PL-10A	10	Red
MOCBP4-PL-15A	15	Blue
MOCBP4-PL-20A	20	Yellow
MOCBP4-PL-25A	25	White
MOCBP4-PL-30A	30	Green

Electrical Specifications

Voltage Rating	14VDC
Reset Type	Type II - Modified Reset
Holding Current	< 0.3 A
Resistance	<20mΩ
Typical Life	200 operations at 200% overload
Operation Temperature	-30°C ~ 60°C
Storage Temperature Rating	-30°C ~ 105°C
Testing	SAE J553 Type II;

Material Specifications

Body Material	Thermoplastic - (UL Rated 94V-0)
Terminals Material	Nickel-plated Copper Alloy
Terminals Material	5.2 mm wide blades (ATC fuse compatible)
Ignition Protected	SAE J1171

Blade Circuit Breaker | MOCBP4-PL

Interrupt Rating

Ampere Rated	Interrupt Rating
5A-10A version	150A @ 14VDC
15A version	225A @ 14VDC
20A version	300A @ 14VDC
25A-30A version	450A @ 14VDC

Trip Time Curve

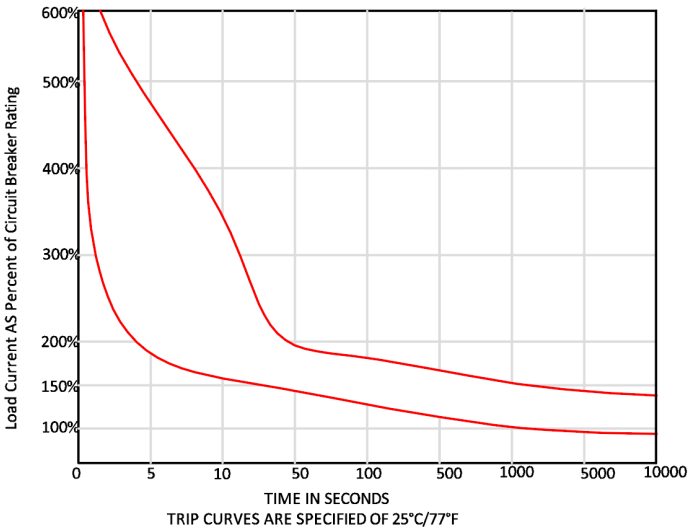

Trip Time Table

Overload Percentage (%)	Trip Time
600	0.2-1.8 seconds
300	1.2-10.0 seconds
200	4.0-45.0 seconds
135	Trip in 1/2 hour
100	No Trip within 1/2 hour

Temperature Derating Curve

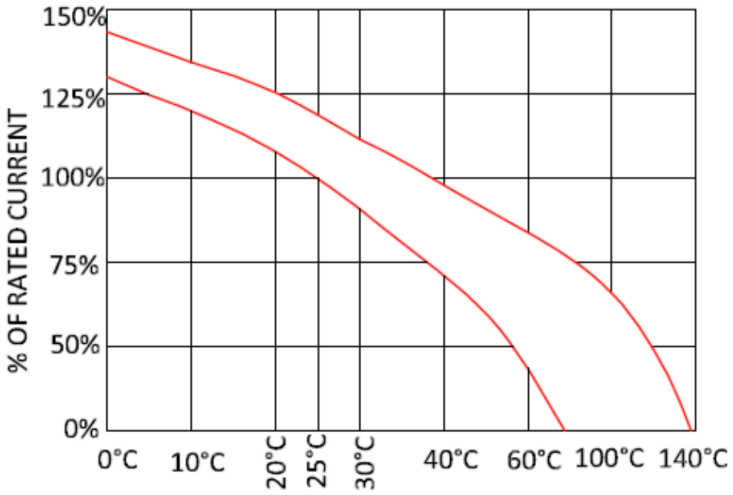

Disclaimer: Information provided is believed to be accurate and reliable. Users are responsible for confirming the suitability and performance of any OptiFuse product for their particular application. These products may not be appropriate for every use, and proper evaluation is recommended before implementation. For additional information, please visit optifuse.com/product-disclaimer.

Specifications are subject to change without notice

Rev	Date of issue	Revision Notes	Designed	Approved
C	06-24-2026	updated format	RC	OF