AIR CONDITIONERS

VERTICAL MOUNT EXTRA SLIM HAZARDOUS LOCATION

CATALOG NUMBER		BTU /HR	VOLTS /HZ	MAX. AMPS	MAX. TEMP	DIMENSIONS			SHIP WGHT LBS.
MILD STEEL	STAINLESS STEEL					H	W	D	
IQ2000VXSXP2	IQ2000VXSXP2-126-SS	2000	120/60	6.6	131°F	24	10	10	80
IQ2000VXSXP2	IQ2000VXSXP2-236-SS	2000	230/60	3.4	131°F	24	10	10	80
IQ2000VXSXP2	IQ2000VXSXP2-480-SS	2000	480/60	1.6	125°F	28.03	10	10	94

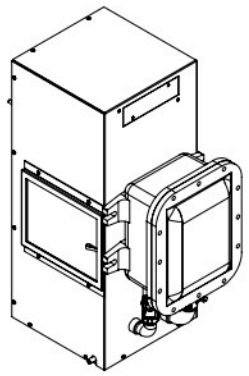

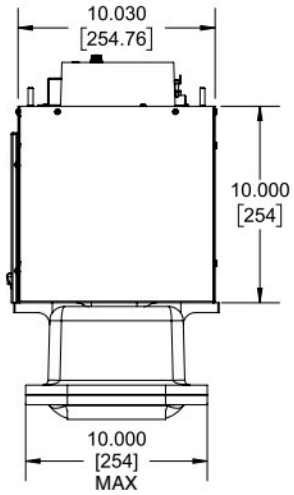

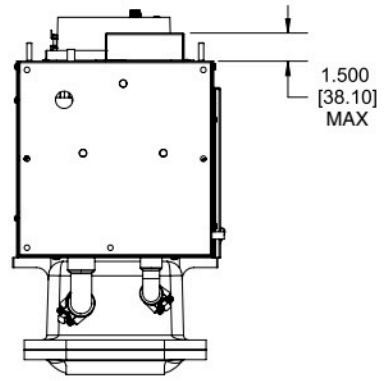

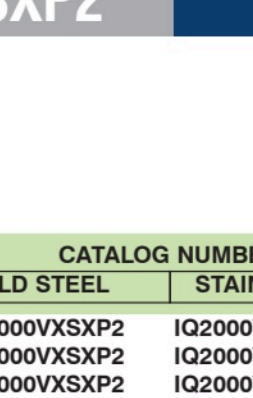

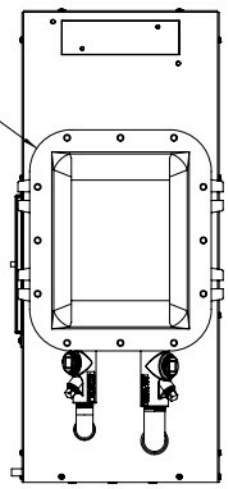

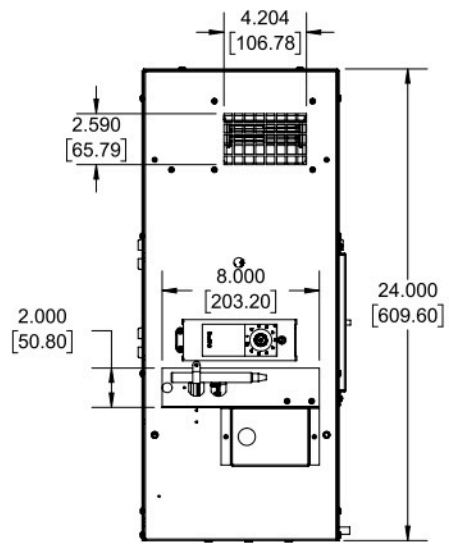

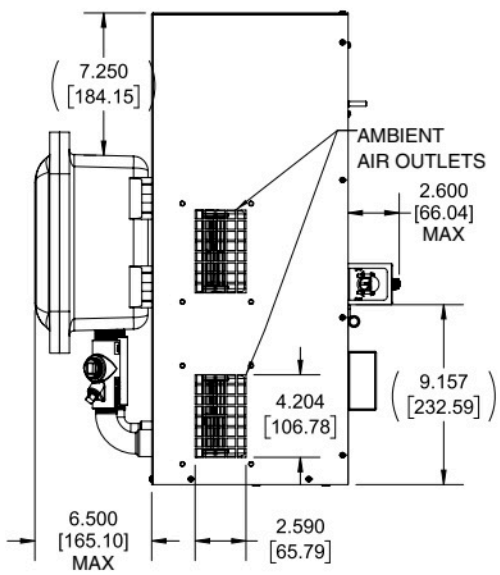

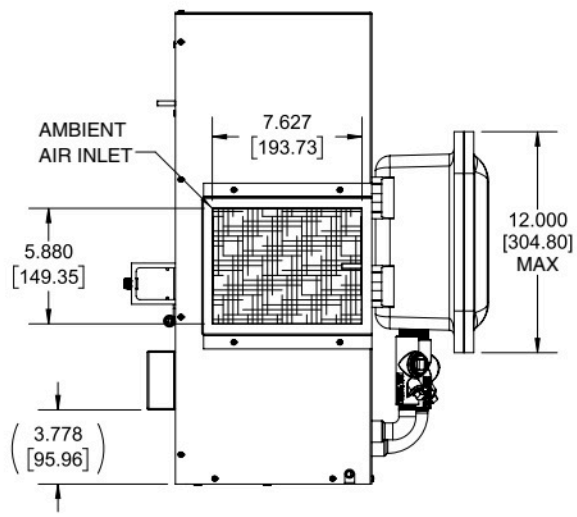

DATA SUBJECT TO CHANGE WITHOUT NOTICE.