AIR CONDITIONERS

TOP MOUNT AIR CONDITIONER - 2000 TO 2500 BTU

CATALOG NUMBER		BTU /HR	VOLTS /HZ	MAX. AMPS	MAX. TEMP	DIMENSIONS			SHIP WGHT LBS.
MILD STEEL	STAINLESS STEEL					H	W	D	
IQ2000TXS-126	IQ2000TXS-126-SS	2000	120	4.7	131°F	9.25	10.28	24.28	50
IQ2000TXS-236	IQ2000TXS-236-SS	2000	230/60	2.3	131°F	9.25	10.28	24.28	50
IQ2500TXS-126	IQ2500TXS-126-SS	2500	120/60	7.6	131°F	9.25	10.28	24.28	50
IQ2500TXS-236	IQ2500TXS-236-SS	2500	230/60	3.6	131°F	9.25	10.28	24.28	50

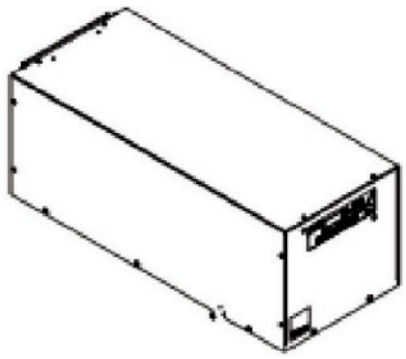

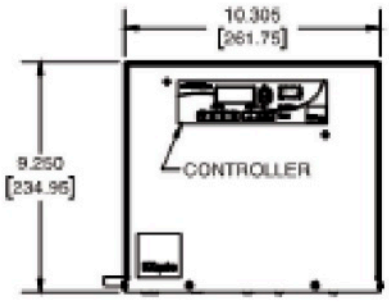

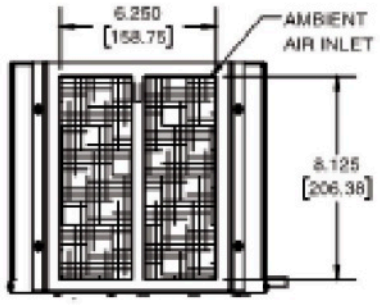

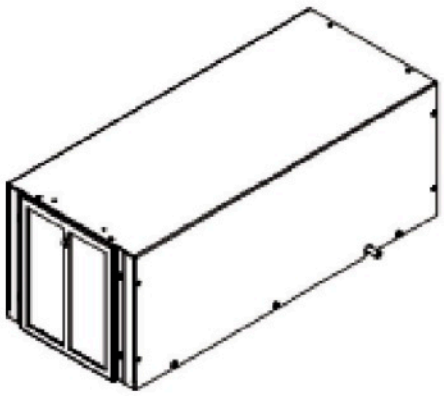

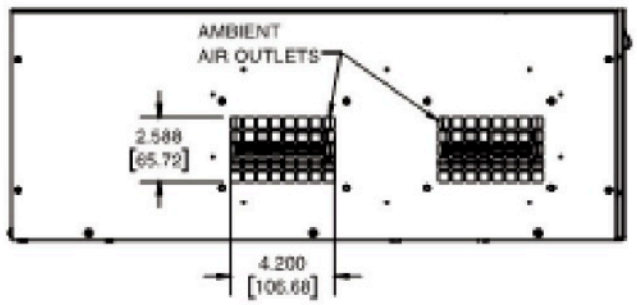

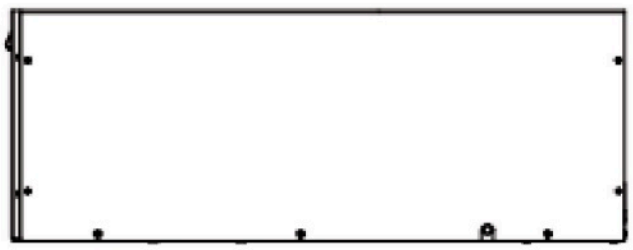

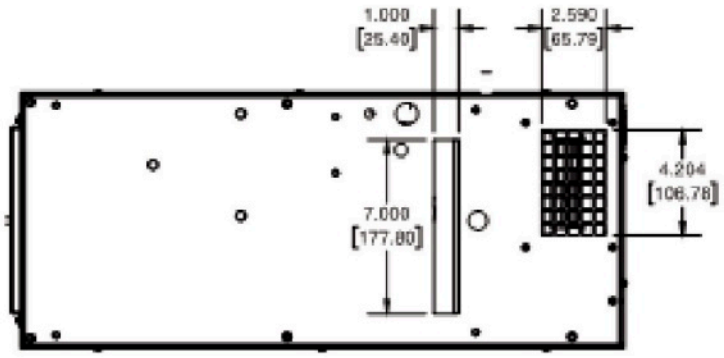

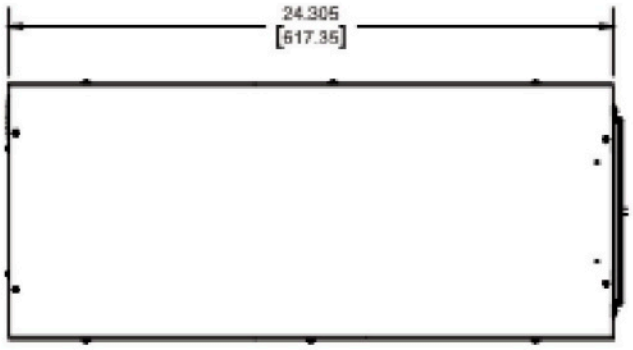

DATA SUBJECT TO CHANGE WITHOUT NOTICE.