LEADERSHIP in Connector Design

KYCON

AUDIO JACKS

STX-35398 Series

Documentation & Ordering Information

Drawing	Stock	CofC
Sample	Email	RFQ

Kycon Part #	STX-35398E-5N-TR

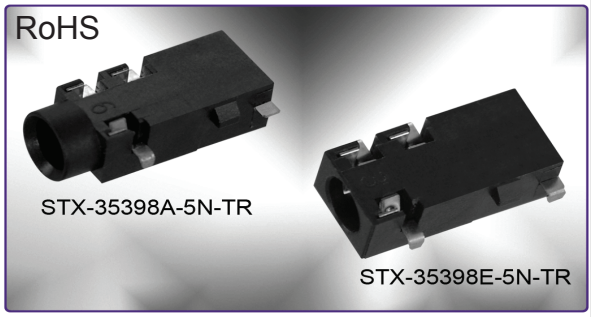

STX-35398 Series

Mid-Mount 3.5mm Audio Jack

Features

- Offered in a 3-Pole Version with switch
- Used in devices such as audio equipment, cell phones, or digital still camera
- Complies with EIA Standards

Performance Specifications

Materials and Finish

Housing : High Temp, Plastic

Terminals : Copper Alloy, Silver Plated

Electrical Characteristics

Contact Resistance

Before Durability Test : 50 Milliohms Max.

After Durability Test :100 Milliohms Max.

Rated Voltage: 16V DC

Rated Current: 0.3A

Insulation Resistance : 100 Megohms Min. at 500V DC

Dielectric Strength : 500V AC RMS for 1 Minute

Operating Temperature : -25°C to + 85°C

Part Number Builder

STX-35398 – E 5 N – TR

Series	Option	Number of Pins	Threading Option	Packaging

Series

STX-35398

Option

A - Through hole and SMT Contacts with barrel

E - Through hole Contacts without barrel

Number of Pins

5 Pin

Threading Option

N - Non-Threaded

Packaging

TR - Tape and Reel

STX-35398A-5N Dimensions

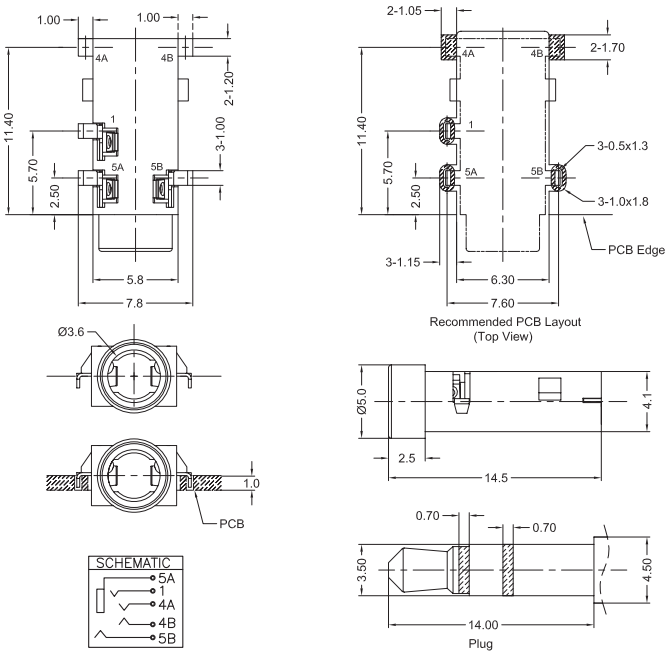
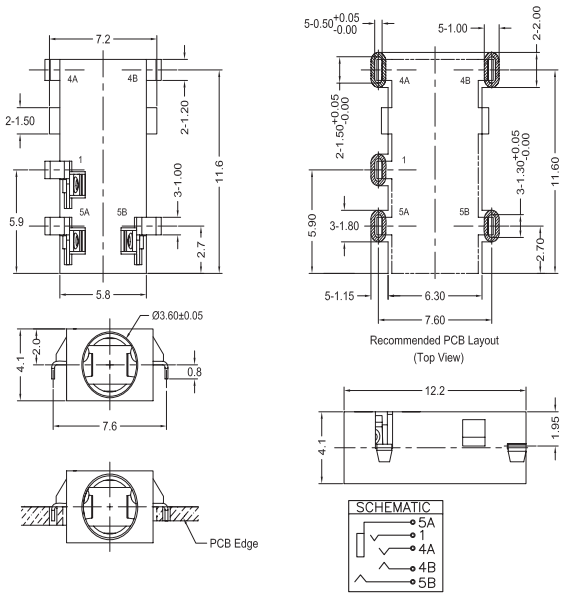
STX-35398E-5N Dimensions